THE UNIVERSITY OF JORDAN
FACULTY OF ENGINEERING & TECHNOLOGY.
DEPARTMENT OF ELECTRICAL ENGINEERING
ELECTRICAL ENGINEERING LAB. EE934:78

EXPERIMENT NO.(1): SINGLE-PHASE POWER TRANSFORMERS: PARAMETERS DETERMINATION AND GENERAL PERFORMANCE CHARACTERISTICS

OBJECTIVES: This experiment is designed to:

(1) Determine the parameters of the transformer equivalent circuit by conducting the no-load and short-circuit tests.

(2) Investigate the performance characteristics of transformer under resistive loading conditions.

EQUIPMENT

- Power transformer (240 VA, 120/130 V, 270/296 T, 50 Hz).
- Transformer Trainer Unit TT179: measurement console, dissectable transformer and other facilities are included.
- Variable AC Power Supply PS189 (VARIAC).
- Resistive Load (variable).
- Wattmeter (Electronic or Moving Coil).
- Connecting Wires.

- Fig.(1) shows the mimic diagram of the transformer unit.

- Fig.(2) shows the wiring arrangement of the two available ty of wattmeters with the Measurement Console.

PRACTICAL PROCEDURE (1): NO-LOAD TEST (OCT).

(1) Connect the circuit shown in Fig.(3).
(2) Set the load resistance to its maximum, and keep S_2 OFF.
(3) Ask the Lab Instructor to check your connections.
(4) Turn S_1 ON.
(5) By means of the VARIAC, start to increase the input (prim voltage V_1 in steps to match the requirements of Table (1 In each step, record V_2, I_1 and P_i in the Table.
(6) Turn the VARIAC knob fully clockwise and turn S_1 OFF.

PRACTICAL PROCEDURE (2): SHORT-CIRCUIT TEST (SCT)

IMPORTANT NOTE: Make sure that the VARIAC knob is fully clockwise and S_1 is OFF.

(1) Connect the circuit as shown in Fig.(3). Short-circuit the load resistance and switch S_2 ON.

(2) Ask the Lab Instructor to check your connections.

(3) Turn S_1 ON and start to increase the input voltage Gradually and Carefully in steps to match the requirements of Table (2).
Remember that a careless mistake may cause severe damage to the equipment.
Record the short-circuit voltage V_{SC}, short-circuit power P_{SC} and the short-circuit secondary current in the Table.

(4) Turn the VARIAC knob fully clockwise and turn S_1 OFF.

(5) Remove the short across the load and switch S_2 OFF.

PRACTICAL PROCEDURE (3): LOAD TEST

(1) Connect the circuit as shown in Fig.(3).

(2) Ask the Lab Instructor to check your connections.

(3) With Switch S_2 is in the OFF state (the Secondary coil is open-circuited), turn S_1 ON and set V_1 to 120 V RMS.
Record V_2, I_2, P_i and P_o in Table (3).

(4) Turn S_2 ON and vary R_L in steps to match the requirements of Table (3). In each step, record V_2, I_2, P_i and P_o. V_1 should be kept constant at its initial value throughout the test.

(5) Turn the VARIAC knob fully clockwise and turn S_1 OFF.

(6) Add a capacitive load in parallel with the minimum resistine load (R = maximum). For three different values of capacitive load (up to = I = 2A), take the readings of V_2, i_2, p_i, po, p.f. and calculate the efficiency and voltage regulation. Draw the phasor diagram.

(7) Repeat step (6) above from inductive load Take measurements for one reading only and draw the phasor diagram

(8) Disconnect the circuit and measure the d.c. resistance of the primany and secondary winding using an ohmmeter.

(1) Calculate the Turns Ratio.

(2) Calculate the parameters R_C and X_M of the exact equivalent circuit.

(3) Calculate the parameters R_1, R_2, X_1 and X_2.

Using the results of the No-Load Test:

(4) Plot V_2 versus V_1 and comment on the nature of the curve and its relationship with the Turns Ratio (a).

(5) Plot I_o versus V_1 and comment on the nature of the curve.

(6) Plot P_{in} versus V_1 and explain the nature of the curve.

Using the results of the Load Test:

(7) For the load-test, calculate for each step the output power P_o, efficiency, voltage regulation, and input power factor. Record the results in Table (3).

(8) Plot efficiency, voltage regulation and input power factor versus P_o. At what load the efficiency is maximum ?.

(9) Using the results of OCT and SCT, calculate the load at which the efficiency is maximum. Compare the answer with the value previously obtained by the load test.

(10) Draw typical phasor diagram of the transformer under the following conditions:
No-load, Short-circuit, Resistive loading, Inductive loading and Capacitive loading.
At what loading condition will the voltage regulation be maximum.

(11) Draw the approximate L-equivalent circuit of the transformer with all parameters given numerically.

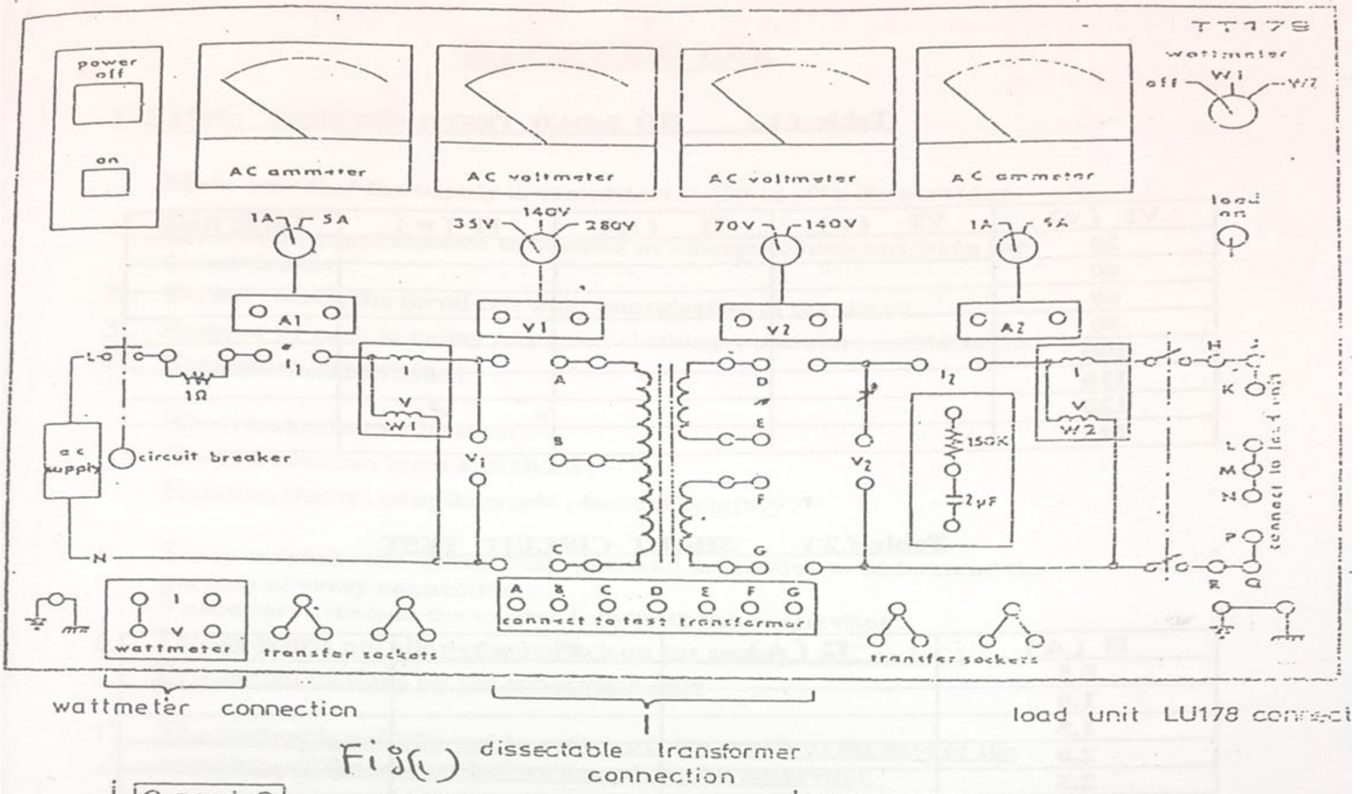

Fig(1)

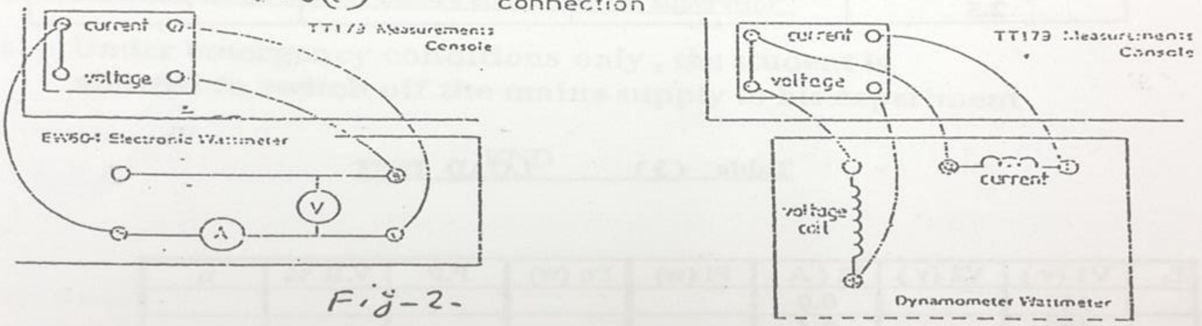

Fig-2-

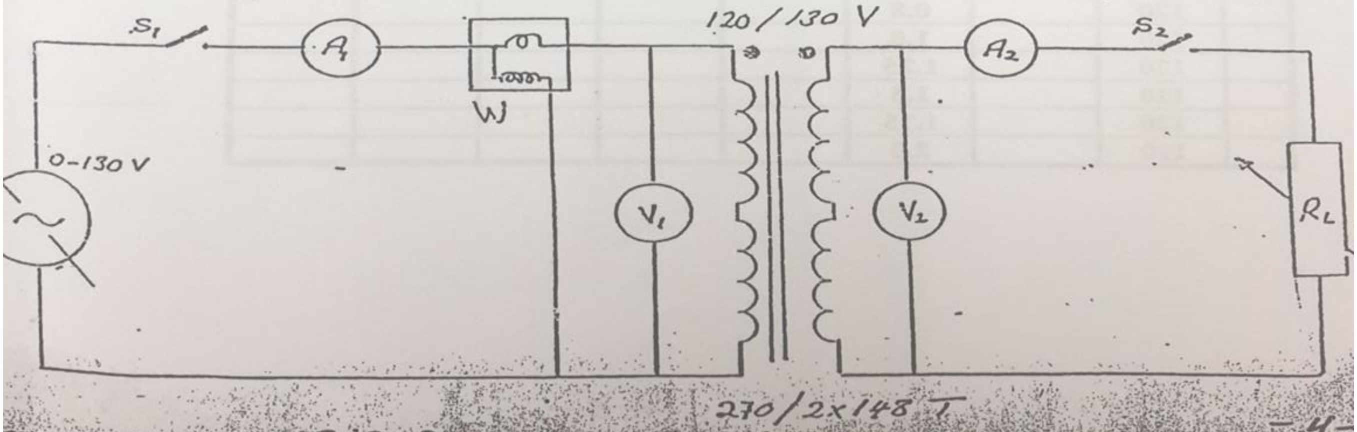

Fig-3-

Table (1) NO LOAD TEST

V1 (v)	V2 (v)	I1 (A)	Pi (w)	Turns Ratio
20				
40				
60				
80				
100				
110				
120				
125				

Table (2) SHORT CIRCUIT TEST

I1 (A)	I2 (A)	Pi (w)	Vsc (v)
0.5			
1.0			
1.5			
2.0			
2.5			

Table (3) LOAD TEST

I_1	V1 (v)	V2 (v)	I2 (A)	Pi (w)	Po (w)	P.F	V.R %	η
	120		0.0					
	120		0.4					
	120		0.6					
	120		0.8					
	120		1.0					
	120		1.25					
	120		1.5					
	120		1.75					
	120		2.0					

THE UNIVERSITY OF JORDAN
FACULTY OF ENGINEERING & TECHNOLOGY.
DEPARTMENT OF ELECTRICAL ENGINEERING
ELECTRICAL ENGINEERING LAB. EE93478

EXPERIMENT NO.(2): SINGLE-PHASE POWER TRANSFORMERS: NATURE OF THE EXCITATION CURRENT AND THE HYSTERESIS LOOP

OBJECTIVES: This experiment is designed to:

(1) Conduct the polarity test.

(2) Examine the nature of the excitation current.

(3) Construct the Hysteresis Loop of a typical magnetic structure and to investigate the effect of having an air gap on this structure.

EQUIPMENT

* Power transformer (240 VA, 120/130 V, 270/296 T, 50 Hz).

* Transformer Trainer Unit TT179: measurement console, dissectable transformer and other facilities are included.

* Variable AC Power Supply PS189 (VARIAC).

* Resistive Load (variable).

* Oscilloscope.

* Connecting Wires.

NOTE (1): It is important to ensure that the Oscilloscope mains earth is not connected.

NOTE (2): Each student should bring with him (4) graph sheets.

NOTE (3): The core of the transformer is made of laminatios bonded together. Each lamination has a total thickness of 0.55 mm of which 0.5 mm is steel and 0.05 is insulation.

NOTE (4): Physical dimensions of the transformer to be tested are shown in Fig(1.A). Fig.(1.B) shows an equivalent structure.

PRACTICAL PROCEDURE (1): POLARITY TEST

(1) Connect the circuit shown in Fig.(2.A).

(2) Switch ON S_1 and set V_1 at 120 V.

(3) Record the readings of V_2 and V.

(4) Switch S_1 OFF and connect the circuit shown in Fig.(2.B).

(5) Oscilloscope settings should be:
5 millisecond/div, 50 V/div for CH1 and CH2.
X10 probs are used.

(6) Switch ON S_1 and set V_1 at 120 V.

(7) Sketch to scale on a Graph Paper the waveforms on the screen.

(8) Turn the VARIAC knob fully clockwise and turn S_1 OFF.

PRACTICAL PROCEDURE (2): THE NATURE OF THE EXCITATION CURRENT

(1) Connect the circuit as shown in Fig.(3). S_2 is OFF.

(2) Oscilloscope settings should be:
5 millisecond/div, 0.5 V/div for CH1 and 50 V/div for CH2.
X10 probs are used.

NOTE (1): From the practical procedure (1), it should be noticed that Primary and Secondary voltages (V_1 and V_2 respectively) are in phase. The two voltages differ slightly in amplitude. In this procedure, and for testing convenience, V_2 is adopted to represent V_1.

NOTE (2): The voltage across the shunt resistor R_{sh} (2 Ω) represents to scale the waveform of the Magnetization Current.

(3) Switch ON S_1 and set V_1 at 80 V.

(4) Sketch to scale on a Graph Paper the waveforms on the screen.

(5) Increase V_1 to 120 V and repeat step (4).

(6) Reset the scale of CH1 to 1.0 V/div.

(7) Turn the VARIAC knob fully clockwise and turn S_1 OFF.

PRACTICAL PROCEDURE (3): THE HYSTERESIS LOOP

(1) Connect the circuit as shown in Fig.(4).

(2) Oscilloscope settings and probs connections:
- Set the oscilloscope to be on the (X-Y) Mode.
- The X channel should represent the voltage across th Shunt resistor at 1 V/div.
- The capacitor voltage V_c is to be shown by CH1 at 0.5 V/di

NOTE (1): The Hysteresis Loop represents the relationship betwee the Flux Density (B) and the Flux Intensity (H) of a certai magnetic structure. Due to the fact that B and H are not directly measurable, this procedure is arranged for indirect measurement of the Hysteresis characteristics.

NOTE (2): H is directly proportional to the Magnetization Current which is almost equal to the Excitation Current and in phase with it. Hence the voltage across the shunt resistor is proportional, to an acceptable degree of accuracy, to the Flux Intensity H.

NOTE (3): The Magnetic Flux (ϕ) is directly related to the Flux Density (B). Also, it is known that at no-load the Flux (ϕ) is usually lagging the voltage V_1 or V_2 by almost 90 degrees. By the addition of the load (150-j1.59) Kn, the transformer could be considered as unloaded. However, most of the Secondary voltage V_2 appears across R, while V_c is a small portion of V_2 and is Lagging it by almost 90 degree. It also could be proved that both V_2 and V_c are directly proportional to Flux ϕ ($V_2=4.44*N_s*f*\phi_m$). The above implies that ϕ is proportional to V_c and in phase with it. Hence V_c represents (B), and the B/H Hyteresis Loop could be represented by V_c/V_{sh}.

(3) Switch ON S_1 and set V_1 at 80 V.
(4) Switch S_2 ON.
(5) Record the value of V_c.
(6) Sketch to scale on a Graph Paper the Hysteresis Loop that appears on the screen.
(7) Increase V_1 to 120 V and repeat steps (4)-(6).
(8) Turn the VARIAC knob fully clockwise and turn S_1 OFF.

PRACTICAL PROCEDURE (4): EFFECT OF INTRODUCING AN AIR GAP:

Release the fasteners on the dissectable transformer frame. Remove the E section of the core with its attached coils. Invert the I section such that the varnished face is now facing the E section and thus the varnish layer is now forming a part of the magnetic circuit. Replace the E section with the coils in position and clamp the transformer frame.

(1) Repeat practical procedure (2) but for V_1 = 120 V only.
(2) repeat practical procedure (3) but for V_1 = 120 V only.
(2) Rebuilt the transformer as it was before.

RESULTS AND COMMENTS

(1) What is the type of the test transformer (Shell or Core) ?

(2) What is the value of the core Stacking Factor ?

(3) Proove that the two transformers of Fig.(1) are identical.

(4) Sketch the schematic diagram of the transformer and use the Dot Notation to indicate the relative polarity of the primary and secondary windings. Is the polarity Additive or Subtractive.

(5) Comment on the nature of the excitation current waveform.

How do the excitation voltage the inclusion of the air gap affect the nature of the excitation current ?

(6) Show that the RMS value of the core Flux is given by:
$\phi = R*C*V_C/N_S$

Use the above relationship to calculat the values of core Flux and Flux Density.

Use the EMF relationship to calculate ϕ and compare the result with the experimental value calculated above.

(7) Show that the instantanuous Flux Intensity of the core is given by $H = (N_p/L*R_{sh})*v_{sh}$

where L is the intermediate length of the core of the equivalent transformer {i.e., Fig.(1.B)}, N_p is the number of turns of the Primary winding and v_{sh} is the instantaneous value of the voltage across R_{sh}.

(8) For all the B/H Hysteresis loops of the experiment, rescale the X-axis to represent Flux Intensity H(A.T/m), and rescale the Y-axis to represent Flux Density B(T).

What is the value of the maximum Flux Intensity ?

(9) Determine the Residual Flux Density and the Coercive Force of the magnetic material. How do the Excitation voltage and the iclusion of the air gap affect them.

(10) Explain how does the inclusion of the airgap affect the Hysteresis Loop (height, width and area).

(11) Proove that the area of the Hysteresis Loop is proportional to the Hysteresis loss of tramsformer core.

(12) Show how can you graphically deduce the waveform of the excitation current from the Hysteresis loop and Flux wavefor

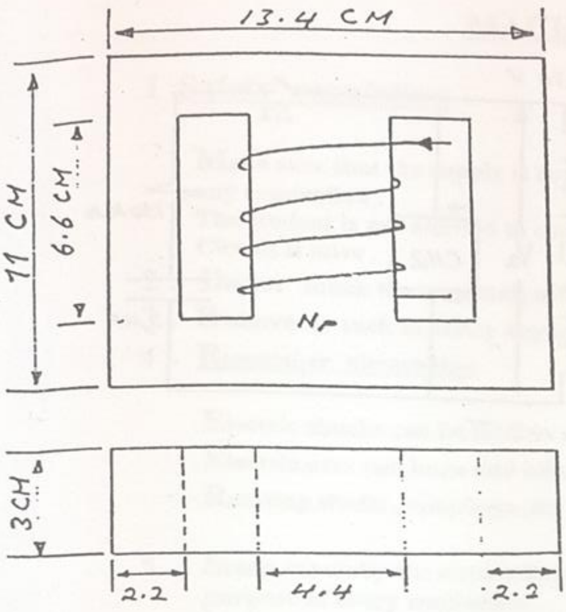

Fig. (1-A)

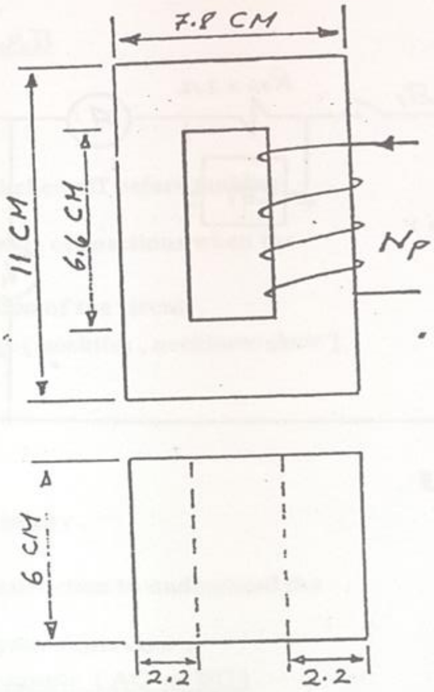

Fig. (1-B)

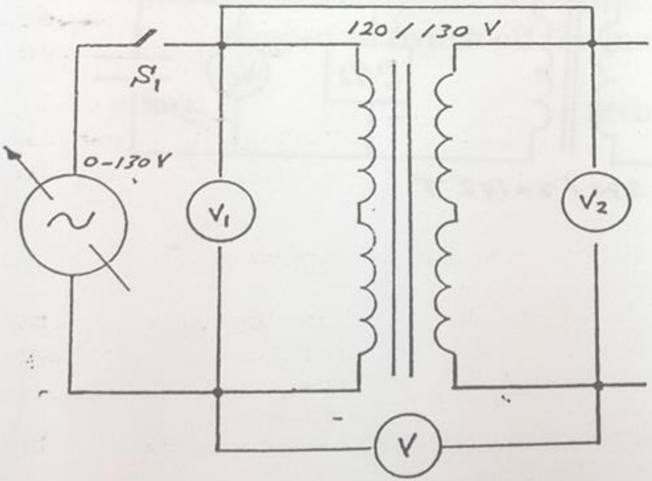

Fig. (2-A)

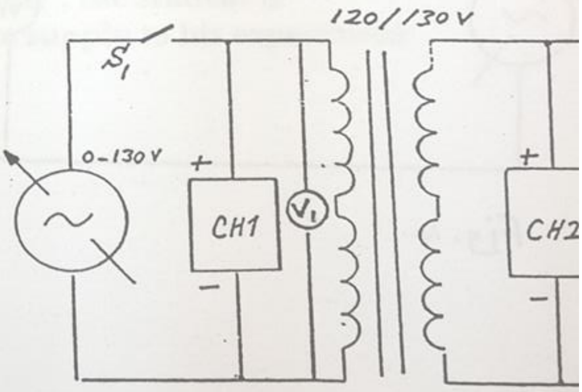

Fig. (2-B)..

THE UNIVERSITY OF JORDAN
FACULTY OF ENGINEERING & TECHNOLOGY.
DEPARTMENT OF ELECTRICAL ENGINEERING
ELECTRICAL ENGINEERING LAB. EE93: .478

EXPERIMENT NO. (3): CHARACTERISTICS OF DC SEPARATELY-EXCITED AND SHUNT GENERATORS.

OBJECTIVES: This experiment is designed to study the:

(1) No-load characteristics of DC generators.
(2) External characteristics of the separately-excited and shu generators.
(3) Regulation characteristics of the separately-excited a shunt generators.

EQUIPMENT

- * DC machine
- * Field regulator
- * Load resistor
- * Two Ammeters
- * One Voltmeter
- * DC power supply (200 V, 10 A)
- * Cut-off switch
- * Prime Mover Set:
  - DC shunt motor
  - Field regulator
  - Variable voltage DC power supply 240 V, 10 A
  - Two Ammeters
- * Control Unit
- * Panel mounting frame
- * Connection cables and plugs
- * Rubber coupling sleeves and coupling guards

MACHINE PARAMETERS:

- * Armature resistance {A1-A2}: 2.5 Ω
- * Compoles resistance {B1-B2}: 1.0 Ω
- * Compensating Winding resistance {C1-C2}: 1.2 Ω
- * Series Field resistance {D1-D2}: 0.5 Ω
- * Shunt Field resistance {E1-E2}: 675 Ω

NOTE: In any practical procedure, Thermal and Earth protection of each of the machines involved should be assured.

SETTING OF THE CONTROL UNIT

Set the control unit as follows:

Speed N = 3000 RPM, Torque M = 10 N.m

Operating Mode: n = constant

PRIME MOVER CONNECTION AND CONTROL:

Fig.(1) shows the general features of the drive system required for the testing procedures to be fulfilled. The prime mover to be used in this experiment is a DC shunt motor. The wiring diagram is shown in Fig.(2). The sequence of steps that should be followed to run and control the speed of this motor is as follows:

(1) While the voltage knob is fully counterclockwise (i.e., zero output voltage) switch S1 ON (position I).

(2) Press the START switch (Green indicator ON).

(3) Set the resistance of the field regulator R_{fm} to almost 200

(4) To start the drive motor, increase V_s gradually up to 220 V. At almost half rated voltage, increase the resistance of the motor field regulator to almost 400 Ω.

(5) The required speed of the motor is set by the field regulato

PRACTICAL PROCEDURE (1): OPEN-CIRCUIT TEST (MAGNETIZATION CURVE

(1) Connect the circuit shown in Fig.(3).

(2) Set the load resistance to its maximum, and keep S_2 OFF.

(3) Set the field regulator R_{fg} to "q" which implies that t field circuit is open-circuited.

(4) Ask the Lab Instructor to check your connections.

(5) Turn S_1 ON (Position I).

(6) Run the Prime Mover as in the previous section and set speed to be 2500 RPM. This speed should be kept const throughout the test.

(7) Record the terminal voltage V_t in Table (1).

(8) Use the generator field regulator R_{fg} to set the excitat current in steps to match the requirements of Table (1). each value of I_f, record V_t in the Table.

(9) Reset the generator field regulator to the "q" position.

(10) Reset the Prime Mover Speed to 2000 RPM.

(11) Repeat steps (7) and (8) above.

PRACTICAL PROCEDURE (2): EXTERNAL CHARACTERISTICS OF SEPARATELY-EXCITED GENERATOR

(1) Reset the motor speed to 2000 RPM and keep this speed fixed throughout the test.

(2) Set the generator field current to 250 mA,

(3) Record the terminal voltage V_t in Table (2).

(4) Switch S_2 ON.

(5) Use the load resistance R_L to set the values of I_L to match the requirements of Table (2). For each value of I_L, record V_t in the Table.

(6) Increase R_L gradually to maximum and switch S_2 OFF.

PRACTICAL PROCEDURE (3): EXTERNAL CHARACTERISTICS (SHUNT GEN.)

(1) Connect the circuit shown in Fig.(4). Note that the circuit of Fig.(3) is applicable, but with X1 connected to A1 and X2 connected to C2.

(2) Repeat steps (3)-(6) of Practical Procedure (1).

(3) Set the generator field current to 250 mA.

(4) Record the terminal voltage V_t in Table (3).

(5) Switch S_2 ON.

(6) Use the load resistance R_L to set the values of I_L that match the requirements of Table (4). For each value of V_t, the speed should be kept fixed at 2000 RPM. For each value of V_t, record I_L.

RESULTS AND COMMENTS

(1) Plot, on the same graph, the No-Load characteristics {i.e., $V_t=f(I_f)$} of the DC macine corresponding to running speeds of 2000 and 2500 RPM.

(2) Show how to determine the Critical Field Resistance.

(3) What is the value of the Residual Voltage. Does this voltage vary with speed.

(4) Plot the External characteristics {i.e., $V_t=f(I_L)$} of the DC generator when it is separately excited. On the same graph, plot (I_L*R_t) and the voltage drop due to armature reaction. R_t is total resistance of the armature circuit.

(5) Plot the External characteristics of the generator when it is self excited (shunt). Comment on the nature of the curve.

(7) How does the short-circuit condition of shunt generators differ from other types of machines. What is the value of the short-circuit current and what are the parameters it depends on

SPEED =2500 RPM = constant Table (1a)

If (mA)	0.0	50	75	100	125	150	175	200	225	250
Vt (V)										

SPEED = 2000 RPM =constant Table (1b)

If(mA)	0.0	50	75	100	125	150	175	200	225	250
Vt (V)										

SPEED = 2000RPM =constant If = 250 mA = constant Table (2)

I (load) Am	0.0	0.5	1.0	1.5	2.0	2.5
Vt (V)						

SPEED = 2000 RPM = constant Table (3)

I (field) mA	0.0	50	75	100	125	150	175	200	225	250
Vt (V)										

SPEED = 2000 RPM = constant Table (4)

I (field) mA	250											0.0
I (load) Am	0.0											
Vt (V)	130	125	115	110	100	90	80	60	40	20	10	0.0

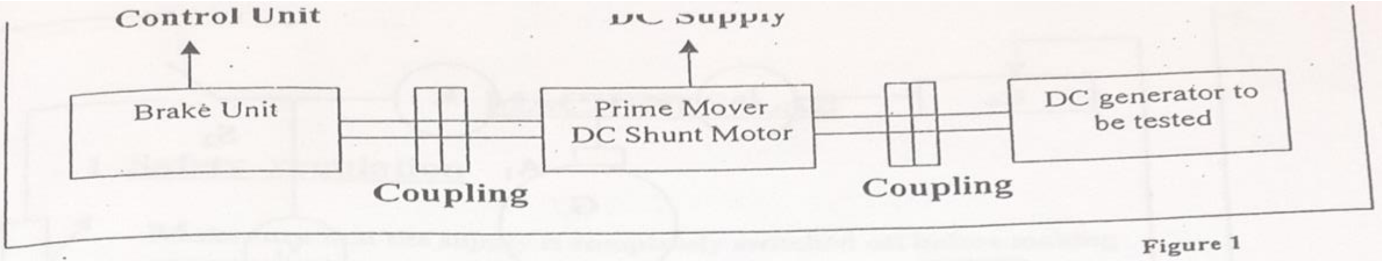

Figure 1

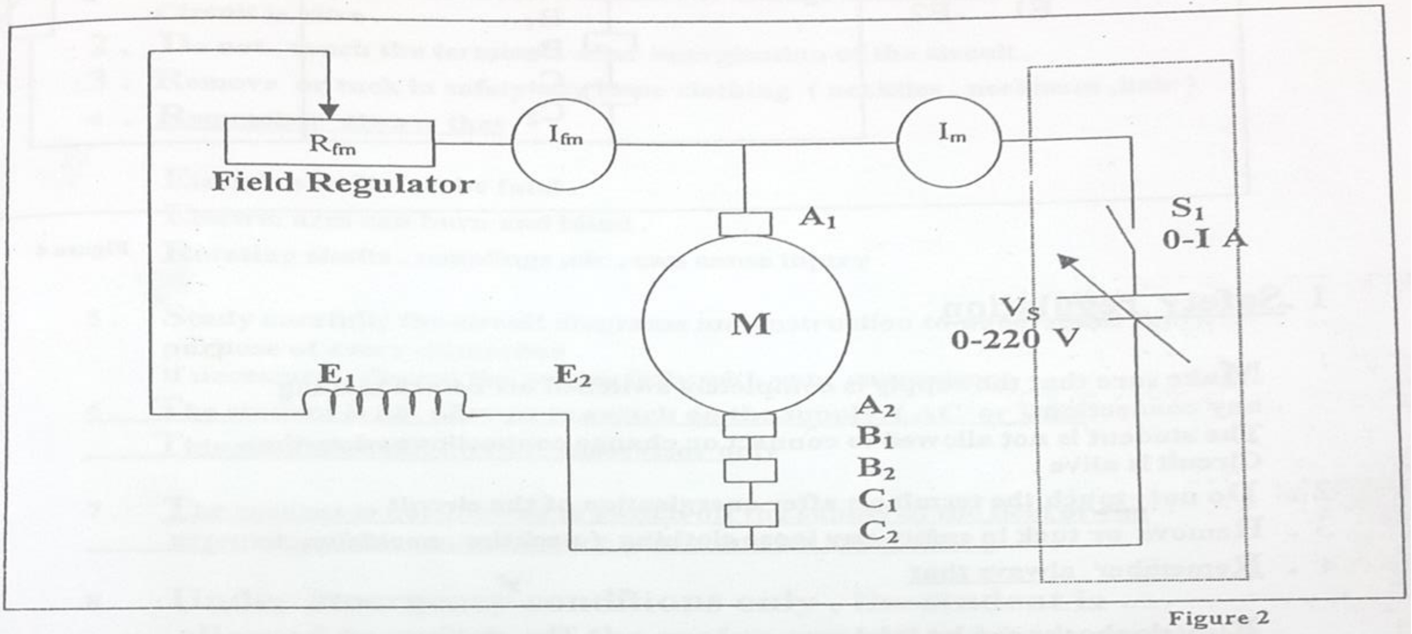

Figure 2

PRACTICAL PROCEDURE:

❖ OPEN CIRCUIT TEST (MAGNETIZATION CURVE):

1. Connect the circuit shown in **Figure 3**.

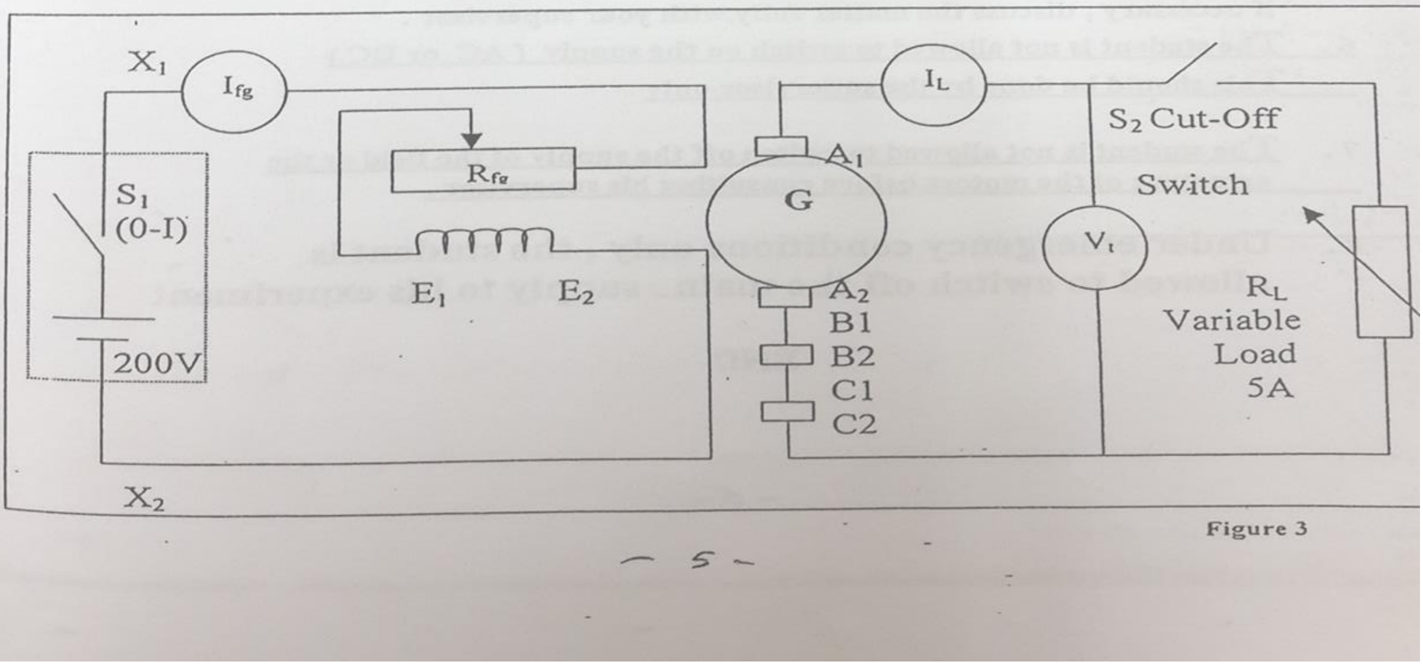

Figure 3

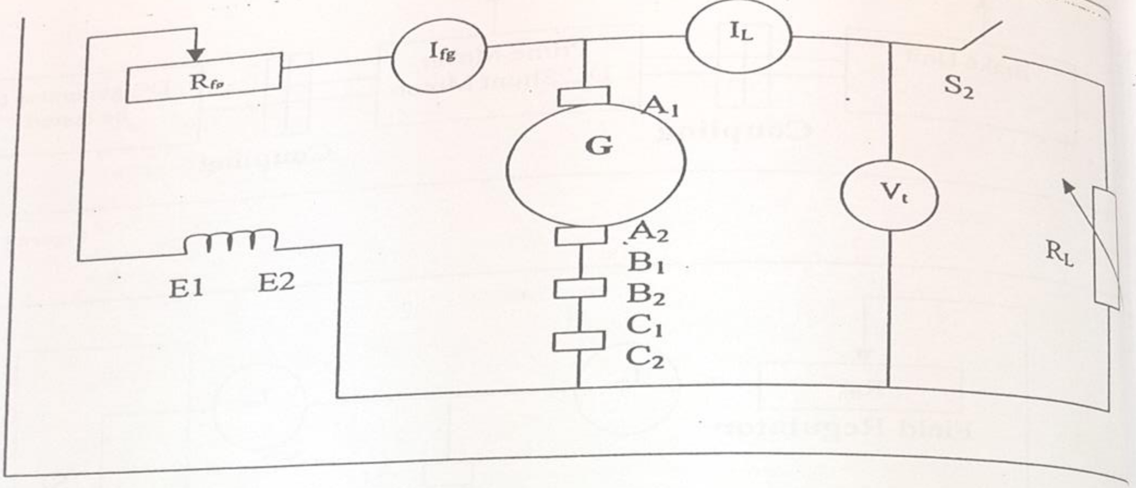

Figure 4

1 .Safety regulation

Make sure that the supply is completely switched off before making any connection .
The student is not allowed to connect or change connections when the Circuit is alive .

2 . Do not touch the terminals after energisation of the circuit .

3 . Remove or tuck in safety any loose clothing (neckties , necklaces ,hair)

4 . Remember always that

Electric shocks can be fatal .
Electric arcs can burn and blind .
Rotating shafts , couplings ,etc , can cause injury .

5 . Study carefully the circuit diagrams and instruction to understand the purpose of every connection .
if necessary , discuss the matter fully with your supervisor .

6 . The student is not allowed to switch on the supply (AC or DC)
This should be done by the supervisor only

7 . The student is not allowed to switch off the supply of the field or the armature of the motors before consulting his supervisor .

8 . **Under emergency conditions only , the student is allowed to switch off the main supply to his experiment**

END

THE UNIVERSITY OF JORDAN
FACULTY OF ENGINEERING AND TECHNOLOGY
DEPARTMENT OF ELECTRICAL ENGINEERING
ELECTRICAL MACHINES LABORATORY EE 0903418

EXPERIMENT NO.4

CHARACTERISTICS AND SPEED CONTROL OF DC MOTORS

OBJECTIVES

- Investigate the *load characteristics* (torque-speed and torque-current) of DC motors.
- Investigate methods of speed control of DC motors.
- Evaluation of the motor performance parameters (efficiency, speed regulation .... etc)

EQUIPMENT

- DC Motor: 220 V, 19 A, 3.6 kW, 1500-3000 RPM. Field Current 1.1 A.
- Eddy-Current Brake: 0-50 Nm.
- Variable Resistor R_B (for eddy-current brake control): 220 V, 20 A, (11 – 220) Ω.
- Variable Resistor $R_{F(EXT)}$ (for field-current control): ~~2.8 A, 170 Ω or~~ 1.4 A, 694 Ω.
- Starting Resistance: 220 V, 21 A, 10.5 Ω
- 3 DC Ammeters: 3 A, 6 A, and 30 A.
- 2 DC Voltmeters: 300 V
- Speedo-meter
- 3 Electromechanical Switches

WIRING DIAGRAMS

Load Circuit

Connect the Eddy-Current Brake circuit as shown in the wiring diagram of Fig.1. Make sure that the resistance R_B is initially Maximum (F-CCW). Eddy-Current switch S_B should be initially at the OFF position.

Armature Circuit

Figure (2) shows the general view of the wiring diagram of the *armature* circuit. *Starting resistance* should initially Maximum (fully-counter-clock-wise F-CCW). The armature circuit switch S_A should be initially at the OFF position.

Field Circuit

Figure (3) shows the general view of the wiring diagram of the field circuit. Field circuit switch S_F should be initially at the OFF position.

GIVEN: Measured Value of the Total Armature Resistance is 1.1 Ω.

You should ask the Lab Instructor to chick the validity of the wiring diagrams before going ahead.

TEST PROCEDURE (A)

Load Characteristics of DC Motors (Rated Voltage, Rated Field)

- Connect the Armature circuit terminals X1-X2 to the **variable** (0-400) V DC Sour (terminals 1 and 2 respectively). Initially, the applied voltage should be zero, and th armature switch S_A should be at the OFF position.
- Connect the terminals of the field circuit Y1-Y2 to the **fixed** (220) V DC Sour (terminals L1-L2 respectively). The switch S_F should be OFF at the moment.
- Switch ON S_F and adjust the field current to (0.8 A) by means of the external fiel resistance $R_{F(EXT)}$. Record the value of the Field Voltage.
- Make sure that the *armature starting resistance* is Maximum (F-CCW).
- Switch ON S_A and increase the armature terminal voltage gradually up to rated valu of 220 V. This voltage should be fixed throughout the test.
- Reset the starting resistance to its Minimum value (F-CW).
- Record the *line current* and the *motor speed* in Table (A). In this case $T_L = 0$.
- Switch ON the Eddy-Current Brake source and vary R_E to get a (3 Nm) load torque Record, in Table (A), the corresponding *line current* and *motor speed*.
- Keep varying the load torque, in steps, to match the readings of Table (A). In each step, record the corresponding *line current* and *motor speed*.
- Reset R_E to its maximum position and switch it OFF.

TEST PROCEDURE (B)

Load Characteristics of DC Motors (Reduced Voltage, Rated Field)

- Keep the field current at 0.8 A by means of the external field resistance $R_{F(EXT)}$ Record the value of the Field Voltage.
- Reduce the armature voltage to 160 V.
- Keep the eddy-current brake circuit OFF.
- Record the *line current* and the *motor speed* in Table (B). In this case $T_L = 0$.
- Switch ON the Eddy-Current Brake source and vary R_E to get a (3 Nm) load torque Record the corresponding *line current* and *motor speed*.
- Keep varying the load torque to match the readings of Table (B). In each step, recor the corresponding *line current* and *motor speed*.
- Reset R_E to its Maximum position (F-CCW) and switch it OFF.

TEST PROCEDURE (C)

Load Characteristics of DC Motors (Rated Voltage, Reduced Field)

- Increase the armature voltage to 220 V.
- Keep the eddy-current brake circuit OFF.
- Reduce the field current to 0.6 A by means of the external field resistance $R_{F(E}$ Record the value of the Field Voltage.
- Record the *line current* and the *motor speed* in Table (C). In this case $T_L = 0$.
- Switch ON the Eddy-Current Brake source and vary R_E to get a (3 Nm) load torc Record the corresponding *line current* and *motor speed*.
- Keep varying the load torque to match the readings of Table (C). In each step, rec the corresponding *line current* and *motor speed*.
- Reset R_E to its Maximum position (F-CCW) and switch it OFF.

ROCEDURE (D)

peed Control of DC Motors: Armature Voltage Control Method

- Reset the field current to 0.8 A by means of the external field resistance $R_{F\ (EXT)}$. Record the value of the Field Voltage.
- Make sure that the resistance R_B is Maximum (F-CCW). Switch ON the Eddy-Current switch.
- Vary R_E to get the rated load torque of 21 Nm. Record the corresponding *line current* and *motor speed* in Table (D).
- Reduce the armature voltage in steps to match the readings of Table (D). In each step, keep the field current constant at 0.8 A by means of the external field resistance, and record the corresponding *line current* and *motor speed.*
- Reset R_E to its Maximum position (F-CCW) and switch it OFF.
- Increase the armature voltage back to its rated value of 220 V.

ROCEDURE (E)

Speed Control of DC Motors: Field-Weakening Control Method

- Make sure that the resistance R_B is Maximum (F-CCW). Switch ON the Eddy-Current switch.
- Vary R_E to get the rated load torque of 21 Nm. Record the *load torque* and the corresponding *motor speed* in Table (E).
- Reduce the Field Current, in steps, to match the readings of Table (E). In each step, keep the Armature Voltage constant at 220 V. Vary R_E to keep the Armature Current at its rated value ($\approx$ 16.5 A).
- In each step, record the corresponding *load torque* and *motor speed in* Table (E).
- Reset R_E to its Maximum position (F-CCW) and switch it OFF.
- Increase the field current back to its rated value of 0.8 A.
- Switch OFF the armature voltage.
- Switch OFF the field voltage.

RESULTS AND DISCUSSION

Procedures (A, B & C)

- In one graph, sketch the *load* characteristics (N_m/T_L) of the three procedures.
- In one graph, sketch the *line current-load torque* characteristics (I_L/T_L) of the three procedures.
- In each case, calculate the *developed torque* T_a, and sketch it, in one graph, versus the *armature current*.
- For each procedure, calculate *the Speed Regulation* and sketch it versus the *load torque*.
- For each procedure, calculate the *Rotational Losses* and sketch it versus the *load speed*.
- For each procedure, calculate the motor *Efficiency* and sketch it versus the *load torque*.

For each graph, comment on the results.

Procedures (D & E)

- From Procedure D, sketch the *Motor Speed* versus the *terminal voltage*. .
- From Procedure E, sketch the *Motor Speed* versus the *field current*.
- Compare the features of the two speed control methods.

- Plot, in one graph, the *load torque* versus the motor *speed* for both procedures.
- Plot, in one graph, the *output power* versus the motor *speed* for both procedures.

Comment on the results of the above two plots.

Table (A): $V_T = 220$ V, $I_F = 0.8$ A

T_L (N.m)	0.0	3.0	6.0	9.0	12.0	15.0	18.0	21.0
N_m (RPM)	1600							
$I_L = I_A$ (A)	.8	3.5						

Table(B): $V_T = 160$ V, $I_F = 0.8$ A

T_L (N.m)	0.0	3.0	6.0	9.0	12.0	15.0	18.0	21.0
N_m (RPM)								
$I_L = I_A$ (A)								

Table (C): $V_T = 220$ V, $I_F = 0.6$ A

T_L (N.m)	0.0	3.0	6.0	9.0	12.0	15.0	18.0	21.0
N_m (RPM)								
$I_L = I_A$ (A)								

Table (D): $T_L = 21$ N.m, $I_F = 0.8$ A

V_T(V)	220	190	160	130	~~130~~ 100
N_m (RPM)					
$I_L = I_A$ (A)					

Table (E): $I_L = I_A \approx 16.5$ A

I_F (A)	0.8	0.7	0.6	~~0.7~~ 95
N_m (RPM)				
T_L (N.m)				

DC shunt motor ((General features))

Fig (1)

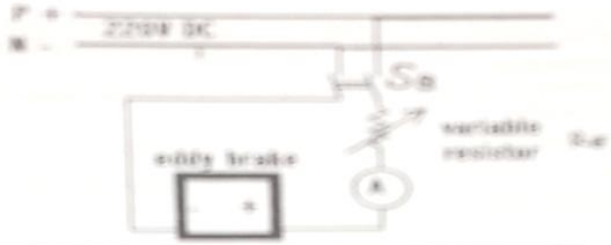

Eddy current brake (circuit and connection)

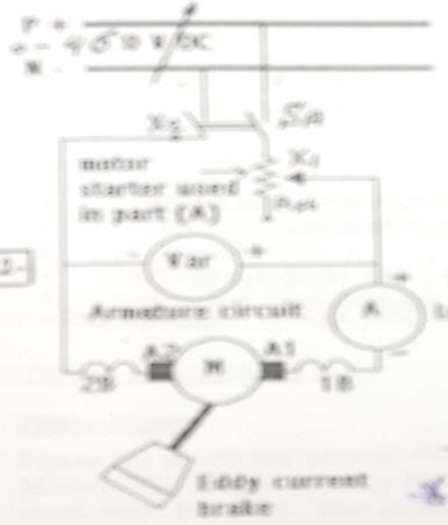

Fig-2-

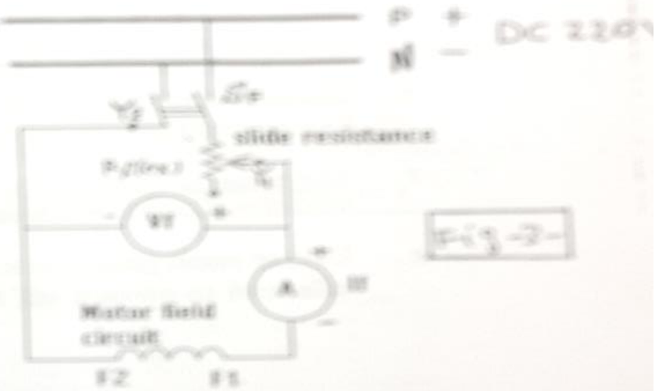

Fig-2-

THE UNIVERSITY OF JORDAN
FACULTY OF ENGINEERING AND TECHNOLOGY
DEPARTMENT OF ELECTRICAL ENGINEERING
ELECTRICAL MACHINES LABORATORY EE 0903~~379~~478

EXPERIMENT NO.5

CHARACTERISTICS OF DC COMPOUND GENERATORS

OBJECTIVES

- Investigate the *no-load characteristics* of DC compound generators.
- Differentiate between the *nature* & the *rules* of the *shunt* and *series fields windings.*
- Investigate and compare the *load characteristics* of the DC *Cumulatively* and *Differentially* compound generator.
- Evaluate the performance parameters (*voltage regulation, efficiency … etc.*) of the DC compound generator.

EQUIPMENT

- DC Shunt Motor (Prime Mover): 220 V, 19 A, 3.6 kW, 1500-3000 RPM. Field Current 1.1 A.
- Motor Starting Resistance: 220 V, 21 A, 10.5 Ω
- Variable Field Resistor $R_{FM(EXT)}$ (for motor field-current control): 1.4 A, 694 Ω.
- Variable Field Resistor $R_{FG(EXT)}$ (for generator main field-current control): 1.4 A, 694 Ω.
- Variable Resistor R_L (for series-field or load-current control): 220/380 V, 3 x (22-440) Ω, 3 x (0.5-10) A.
- DC Compound Generator: 220 V, 4.5 kW, 19.5 A, 1500 RPM, Field Current 0.65 A.
- 2 DC Ammeters: 0-3 A
- 2 DC Ammeter: 0-30 A
- 1 DC Voltmeters: 300 V
- 4 Electromechanical Switches
- Speedometer: 30-4000 RPM

WIRING DIAGRAMS

Prime-Mover

Figure (1) shows the general view of the wiring diagram of the prime mover (DC Shunt Motor). The *Motor Starting Resistance* R_{ST} should be initially Maximum (fully-counter-clock-wise F-CCW). The *Armature Circuit* switch S_A should be initially at the OFF position. The *Field Circuit* switch S_F should be initially at the OFF position.

Compound Generator: No-Load Test

Figure (2) shows the general view of the wiring diagram of the Compound Generator under *no-load* conditions. Make sure that the external resistance of the *shunt-field* windings $R_{FG(EXT)}$ is initially Maximum. The external resistance of the *series-field* windings R_L should also be Maximum (F-CCW). S_{FG} and S_L should be at the OFF positions.

Compound Generator: Load Test

Figure (3) shows the wiring diagram of the load test of the DC Compound Generator. Make sure that the external resistance of the *shunt-field* windings $R_{FG(EXT)}$ is initially Maximum. The load resistance R_L should also be Maximum (F-CCW). S_{FG} and S_L should be initially at the OFF positions.

GIVEN MOTOR PARAMETERS

Total Armature Resistance = 1.2 Ω, Series Field Resistance = 0.2 Ω, Shunt Field Resistance = 263 Ω.

PRECAUTION

You should ask the Lab Instructor to chick the validity of your wiring diagrams before going ahead.

STARTING AND ADJUSTMENT OF THE PRIME-MOVER

- Switch ON the Mains Switch S_M.
- Switch ON the Motor Filed switch S_F and adjust the field current carefully until the field current is 0.9 A.
- Switch ON the Armature Circuit switch S_A. The motor will start to run.
- Reset the Motor Starting Resistance R_{ST} to its Minimum value (F-CW).
- Vary the external resistance in the motor field circuit $R_{FG(EXT)}$ up to the point at which the motor speed is 1500 RPM. ***This speed should always be monitored and kept constant.***

TEST PROCEDURE (A): *No-Load Characteristics:*

(I) Only The Main Shunt-Field Winding is Externally Excited

- While the *Generator Shunt (Main) Field Current* is zero (S_{FG} is OFF), record the generator terminal voltage in Table (A-I).
- Switch ON S_{FG} and adjust, in steps, the generator shunt-field current by means of $R_{FG(EXT)}$, to match the readings of Table (A-I). In each step, record the generator terminal voltage in the Table.
- Reset back the generator field current to its Minimum by means of $R_{FG(EXT)}$.
- Switch OFF the generator field circuit by means of S_{FG}.

(II) Only The Series-Field Winding is Externally Excited

- While the Series Field Windings switch S_L is OFF, (zero series field current), record the generator terminal voltage in Table (A-II)
- Switch the Generator Series Filed switch S_L ON and adjust, in steps, the series field current I_S, which is equivalent to the load current I_L, by means of R_L, to match the readings of Table (A-II). In each step, record the generator terminal voltage in the Table.
- Reset back the series field current to Maximum by means of R_L.
- Switch OFF the generator series field circuit by means of S_L.

TEST PROCEDURE (B): *No-Load Characteristics: Both Shunt-Field and Series-Field Windings are Externally Excited*

(I) Cumulatively Compound

- Switch S_{FG} ON and adjust, in steps, the generator shunt-field current by means of $R_{FG(EXT)}$, to 0.65 A.
- While the Series Field Windings switch is OFF, (zero series field or load current), record the generator terminal voltage in Table (B-I).
- Switch the Generator Series Filed switch S_L ON and adjust, in steps, the series field current, by means of R_L, to match the readings of Table (B-I). In each step, record the generator terminal voltage in the Table.
- Reset back the series-field current to its Minimum by means of R_L.
- Switch the generator series-field circuit S_L OFF.
- Reset back the shun-field current to its Minimum by means of $R_{FG(EXT)}$.
- Switch OFF the generator shunt-field circuit by means of S_{FG}.

(II) Differentially Compound

- Reverse (interchange) the connections of the series field windings D1-D2.
- Repeat Procedure (B-I) completely as above. Record the results in Table (B-II).
- Reverse (interchange) back the connections of the series field windings D1-D2.
- Switch OFF the main switch S_M.

TEST PROCEDURE (C)

LOAD Characteristics of DC Compound Generators

(I) Cumulatively Compound

- Construct the wiring diagram of Fig.3.
- Restart the Prime Mover as before. Adjust its speed to 1500 RPM.
- Switch S_{FG} ON, and adjust the shunt field current by means of $R_{FG\ (EXT)}$ to its rated value of 0.65 A.
- While the Load switch S_L is OFF, make sure that the terminal voltage is 220 V.
- Switch the Load ON by means of switch S_L and adjust, in steps, the Load Current I_L by means of the load resistance R_L, to match the readings of Table (C-I). In each step, keep the prime mover speed constant at 1500 RPM, and record the generator terminal voltage and the field current in the Table.
- Reset back R_L to Maximum (F-CCW).
- Switch OFF the load circuit by means of S_L.
- Reset the Generator Shunt (Main) Field Current to Minimum by means of $R_{FG(EXT)}$.
- Switch OFF the main field circuit switch S_{FG}

(II) Differentially Compound

- Reverse (interchange) the connections of the series field windings D1-D2.
- Switch S_{FG} ON, and adjust the shunt field current by means of $R_{FG\ (EXT)}$ to its rated value of 0.65 A.
- While the Load switch S_L is OFF, make sure that the terminal voltage is 220 V.
- While the switch S_L is OFF, record the generator terminal voltage in Table (C-II).

- Switch the Load ON by means of switch S_L and adjust, in steps, the Load resistance R_L to match the readings of Table (C-II). In each step, keep the prime mover speed constant at 1500 RPM, and record the Load & Main Field currents in Table (C-II).
- Reset back R_L to Maximum (F-CCW), and switch OFF the load circuit by means of S_L.
- Reset the Generator Shunt (Main) Field Current to Minimum by means of $R_{FG(EXT)}$.
- Switch OFF the main field circuit switch S_{FG}

Switch the Motor Armature Circuit OFF.

Switch the Motor Field Circuit OFF

Switch the Mains OFF

DISCUSSIONS & COMMENTS

Procedure (A)

- Sketch the No-Load (or Magnetization) characteristics of the generator (i.e., V_{oc} versus I_f). Only the shunt field winding is excited.
- Sketch the Magnetization characteristics (i.e., V_{OC} versus I_S) of the series-field. Only the series field winding is excited.
- Compare the nature of the two curves above.
- Calculate the turns ratio of the shunt and series field winding.

Procedure (B)

- Sketch, on the same graph, the Magnetization characteristics (V_{OC} versus I_L) of sub-procedures (B-I) and (B-II). Notice the degree of saturation in each curve.

Procedure (C)

For both sub-procedures (C-I) & (C-II), it is required to:

- Sketch, in one graph, the Load characteristics (V_T versus I_L) of the DC Compoun Generator.
- For each value of load current I_L, calculate the Voltage Regulation (V.R %). Sketch in one graph, V.R % versus I_L.
- For each value of the load current I_L, Calculate the developed Armature EMF, the Developed Armature Power P_D, and the Shaft (Output) Power P_{SH}. Sketch, in one graph, P_D and P_{SH} versus the Load Current I_L.
- For each value of the load current, calculate the generator Efficiency η. Sketch, in one graph, η versus the Load Output Power.

Comment on all the results above.

BEST WISHES

Table (A-I): $I_S = I_L = 0$, $N_m = 1500$ RPM. (SHUNT FIELD ONLY)

I_F (A)	**0.0**	**0.3**	**0.4**	**0.5**	**0.6**	**0.65**	**0.7**
V_{OC} (V)							

Table (A-II): $I_F = 0$, $N_m = 1500$ RPM. (SERIES FIELD ONLY)

$I_L = I_S$ (A)	**0**	**3**	**6**	**9**	**12**	**15**	**18**
V_{OC} (V)							

Table (B-I): $I_F = 0.65$ A, $N_m = 1500$ RPM. (CUMMULATIVE)

$I_L = I_S$ (A)	**0**	**3**	**6**	**9**	**12**	**15**	**18**
V_{OC} (V)							

Table (B-II): $I_F = 0.65$ A, $N_m = 1500$ RPM. (DIFFERENTIAL)

$I_L = I_S$ (A)	**0**	**3**	**6**	**9**	**12**	**15**	**18**
V_{OC} (V)							

Table (C-I): $N_m = 1500$ RPM. (CUMMULATIVE)

$I_L = I_S$ (A)	**0**	**3**	**5**	**7**	**9**	**11**	**13**
V_T (V)	220						
I_F(A)	0.65						

Table (C-II): $N_m = 1500$ RPM (DIFFERENTIAL)

$I_L = I_S$ (A)	**0**						
V_T (V)	220	200	150	100	50	25	10
I_F(A)	0.65						

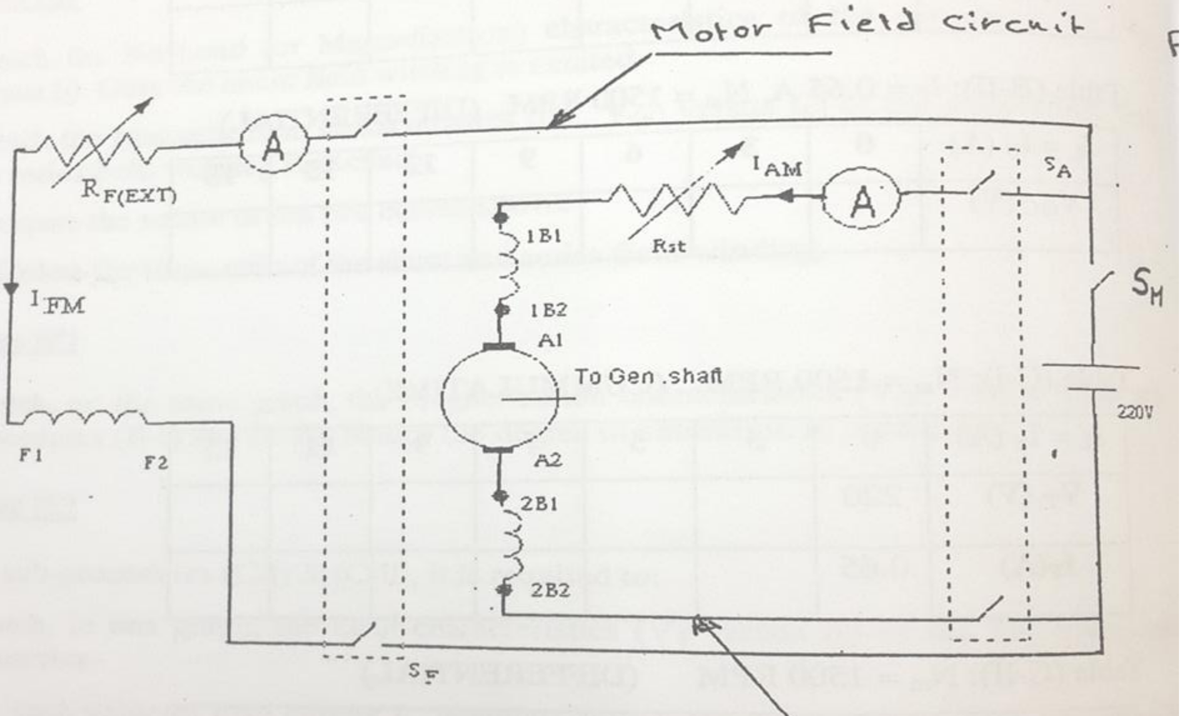
Motor Field Circuit
R_F(EXT)
A
I_FM
F1
F2
S_F
I_AM
S_A
A
Rst
1B1
1B2
A1
To Gen.shaft
A2
2B1
2B2
S_M
220V
Motor Armature

Fig. 1

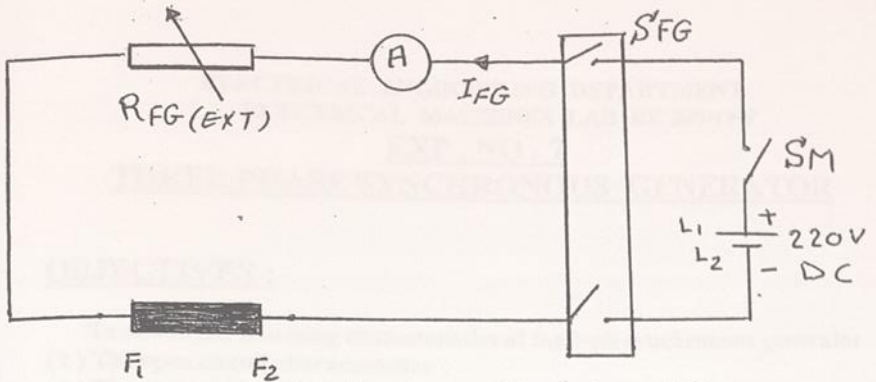

Fig-2-

Generator Field circuit (shunt) F1 - F2

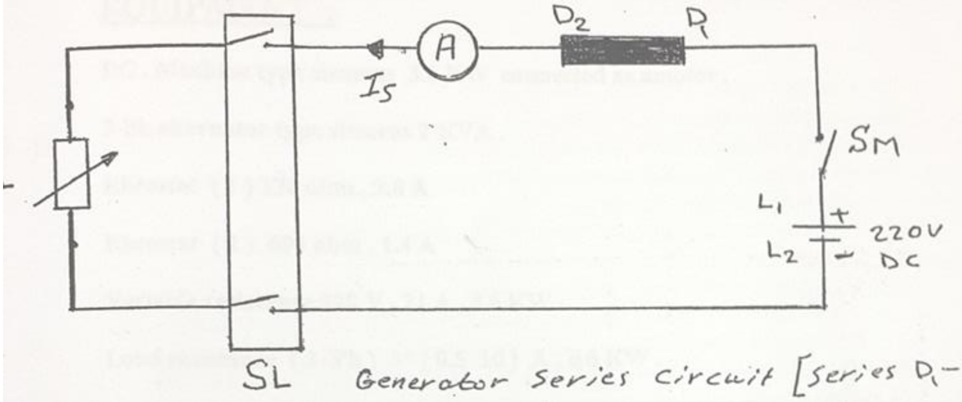

Fig-2-

Generator Series circuit [series D1 - D2]

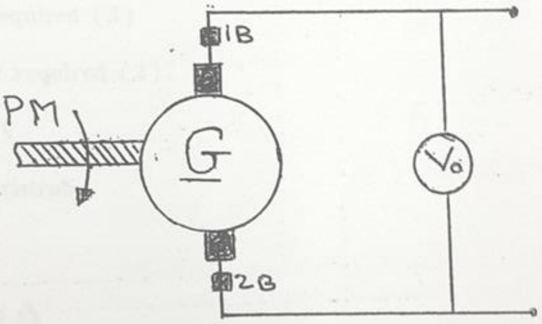

Fig-2-

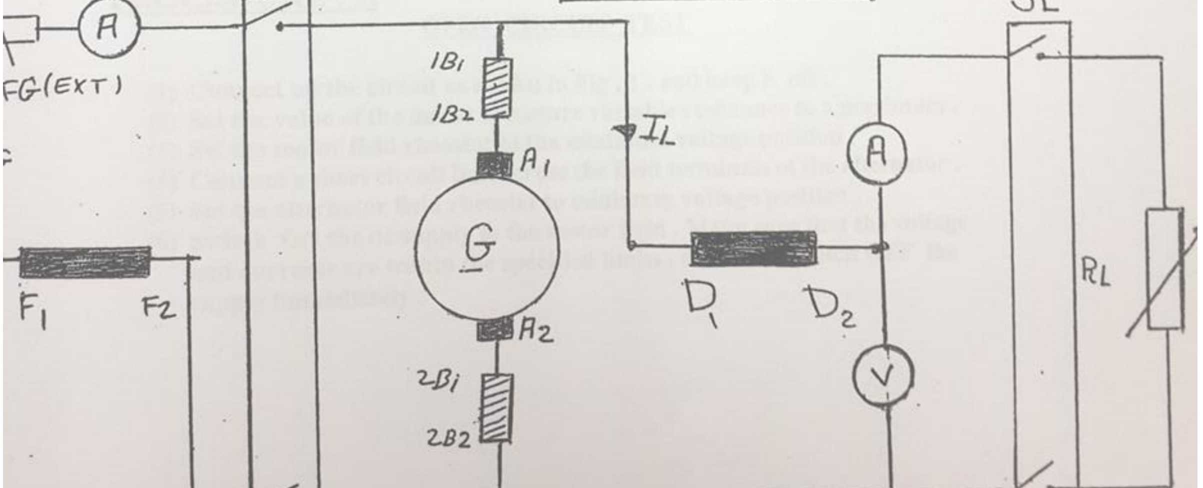

Fig.3

(6) Switch Off the supply and reconnect the secondary circuit as show figure (1D). Keep the primary as it is in fi (1A) and ask the lab instructor to check your connections.

(7) Switch ON the supply and increase the supply voltage to 110V (li line). Take the readings as shown in Table (3). Switch off the supply. primary current should not exceed the rated current (7.8 A)

PRACTICAL PROCEDURE (2) STAR-DELTA CONNECTION

(1) Reconnect the secondary circuit as shown in figure (2A) keeping primary as shown in figure (1A). Ask the lab instructor to check connections.

(2) Take the readings of currents, voltages and power as shown in first s Table (4).

(3) Repeat steps (1) & (2) above for secondary circuit as shown in figure with resistance setting at (ma.x) and take second set of readin Table (4). Make sure that primary current does not exceed the current.

PRACTICAL PROCEDURE (3) EDELTA-DELTA CONNECTION

(1) Repeat practical procedure (2) above for figures (3A) with (2A) & Make sure that the primary current does not exceed (10A).

(2) Take the readings as shown in Table (5).

RESULTS AND COMMENTS

(1) Draw a graph showing the no load power against the primary voltage. From the graph obtain the values of power to calculate Rc and Xm refered to low voltage side for the voltages used in various connections.

(2) Draw a graph showing the short circut power against the primary current. Find the equivalent resistance and reactance for the transformer reffered to low voltage side.

(3) For each of the four connections calculate the theoratical transformation ratios. Compare them with practical values of the tests.

(4) For each of the four connections calculate the voltage regulation.

(5) Calculate the efficiencey of the transformer for various connections.

(6) Explain what is ment by vector groups of transformer. How does it affect the connections if we intend to use the other 110V windings (un used in this experiment) to be connected in parallel with the one already used.

(7) Compare the four types of connections interms of the harmonics currents and voltages.

(8) Draw phasor diagrams for each of the four connections with the resistive loads used.

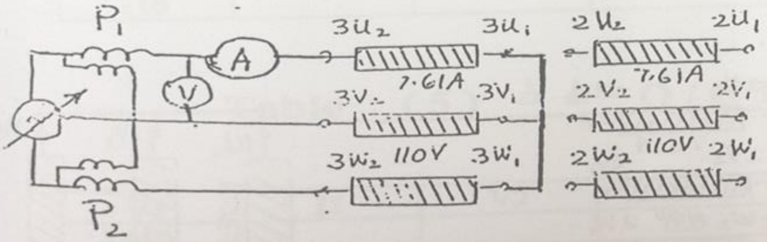

Figure (1A)

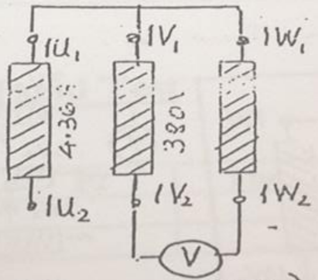

Figure (1B)

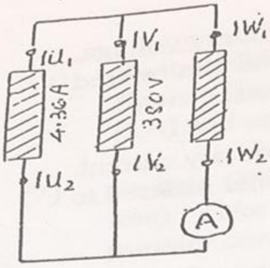

Figure (1C)

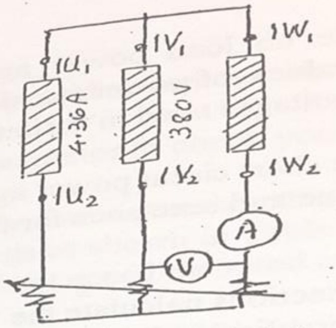

Figure (1D)

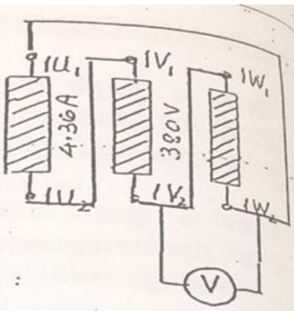

Figure (2A)

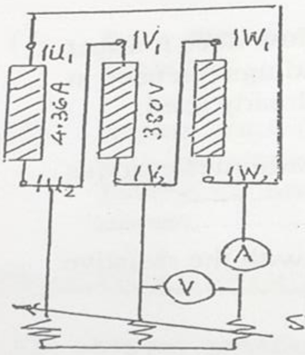

setting 56

Figure (2B)

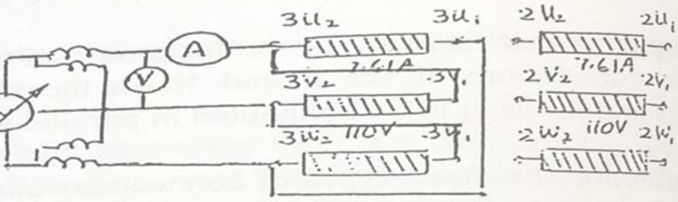

Figure (3A)

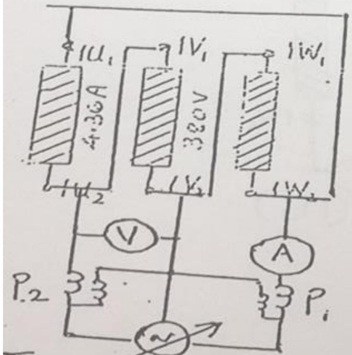

Figure (4A)

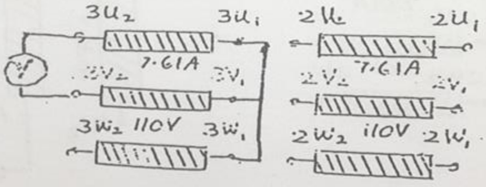

Figure (4B)

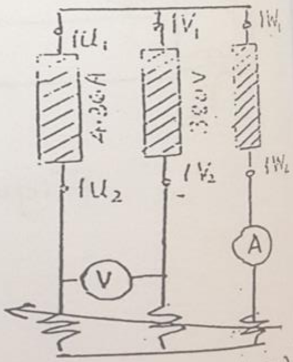

Figure (4C)

Table (1) OCT YY

V1	40	70	110	150	190
I1					
P1					
P2					
V2					
Ptot					

Table (2) SCT YY

V1					
I1	2	4	6	7	7.6
I2					
P1					
P2					
Ptot					

Table (3) Y Y

V1	I1	V2	I2	P1	P2	Ptot
110						

Table (4) Y∆ O / C Test & Load Test

V1	I1	V2	I2	P1	P2	Ptot
110			0.0			
110						

Table (5) ∆ ∆ O / C Test & Load Test

V1	I1	V2	I2	P1	P2	Ptot
110			0.0			
110	10					

ELECTRICAL ENGINEERING DEPARTMENT
ELECTRICAL MACHINES LAB EE 0478

EXP . NO . 7

THREE PHASE SYNCHRONOUS GENERATOR

OBJECTIVES :

To obtain the following characteristics of the 3-ph synchronous generator

(1) The open circuit characteristics .
(2) The short circuit characteristics .
(3) The load characteristics .

EQUIPMENT :

DC . Machine type siemens 3.6 KW connected as amotor .

3-Ph alternator type siemens 2 KVA .

Rheostat (1) 170 ohm , 2.8 A

Rheostat (2) 694 ohm , 1.4 A

Variable resistance 220 V , 21 A , 3.6 KW

Load resistance (3- Ph) 3* (0.5 10) A , 6.6 KW .

Ammeter 0 6 A dc required (3)

Ammeter 0 - 6 A a.c required (2) .

Voltmeter 0 - 1000 V

Stroboscope type movistrob

Double pole switches

PROCEDURE : A

OPEN CIRCUIT TEST

(1) Connect up the circuit as shown in Fig . 1 . and keep S off .
(2) Set the value of the motor armature variable resistance to a maximum .
(3) Set the motor field rheostat to the minimum voltage position .
(4) Connect a short circuit link across the field terminals of the alternator .
(5) Set the alternator field rheostat to minimum voltage position .
(6) Switch ON the dc supply to the motor field . Make sure that the voltage and currents are within the specified limits , otherwise switch OFF the supply immediately .

(7) Switch ON the dc supply to the motor armature , Make sure that the voltages and currents are within the specified limits ,otherwise switch OFF the supply immediately .

(8) Decrease the variable resistance in the motor armature circuit and allow the motor to start up .

(9) Adjust the motor speed by adjusting the motor field current until a speed of 1500 RPM is reached.

(10)Remove the short circuit link from the alternator field winding .

(11) Switch ON the dc supply to the alternator field winding .

(12) Vary the alternator field current in steps of 0.1A until the alternator out put voltage not exceed (495) volts ,this voltage is equal the 130% of the specified line voltage (line voltage = 380 V) .

(13) Switch OFF the supplies to all circuits .

PROCEDURE : B

SHORT CIRCUIT TEST

(1) Connect up the circuit as shown in Fig.1 . And keep (S) OFF

(2) Connect the terminal U1 ,V1 , W1 by a short link

(3) Carry out steps (2) to (10) in procedure A ..

(4) Ensure that the field current rheostat in the alternator circuit is at the minimum voltage position

(5) Remove the short circuit link in the alternator field circuit .

(6) Switch ON the dc supply to the alternator field .

(7) Increase the alternator field current in steps of 0.1 A and make sure that the alternator current does not exceed (4.3) A This current is (150% * I rated), (I rated = 2.9 A) ,Keep the speed constant at each step .

(8) Vary the speed with I sc = 2.9 A (I rated) and keep the excitation current constant , How does the Isc react . Give an explanation

(9) Switch OFF all supplies .

(10) Plot the short circuit characteristics of the alternator .

(11) Find the value of Zs .

PROCEDURE : C

LOAD TEST

(1) Connect up the circuit as shown in Fig . 1

(2) Carry out steps (2) to (10) in procedure A.

(3) Set the load resistance to maximum value .

(4) Remove the short circuit link from the alternator field .

(5) Switch ON the dc supply to the alternator field .

(6) Adjust the alternator field current until the open circuit terminal voltage of the alternator is equal to the maximum value obtained in the open circuit test (495 V) at speed of 1500 RPM and keep it constant through the test .

(7) Switch ON the load and vary the load current from 0.5 A to 2.9 A in steps of 0.5 A . Note corresponding values of terminal voltage and ensure that the motor speed remains constant at each step .

(8) Plot the V- I characteristic for the alternator .

(9) Draw the vector diagrams for each loading condition and correlate the results with those obtained experimentally .

PROCEDURE : D

Measurement of Armature Resistance

(1) Connect the alternator circuit as shown in Fig . 2
(2) Make sure that the rheostat is at the zero volt output condition .
(3) Increase the current to (2) A and record the dc . voltage .
(4) Determine the armature dc resistance .
(5) Is this resistance equal to the a.c resistance .Why ?
(6) Determine the value of Xs .

Motor circuits (field circuit & armature circuit)

Fig (1)

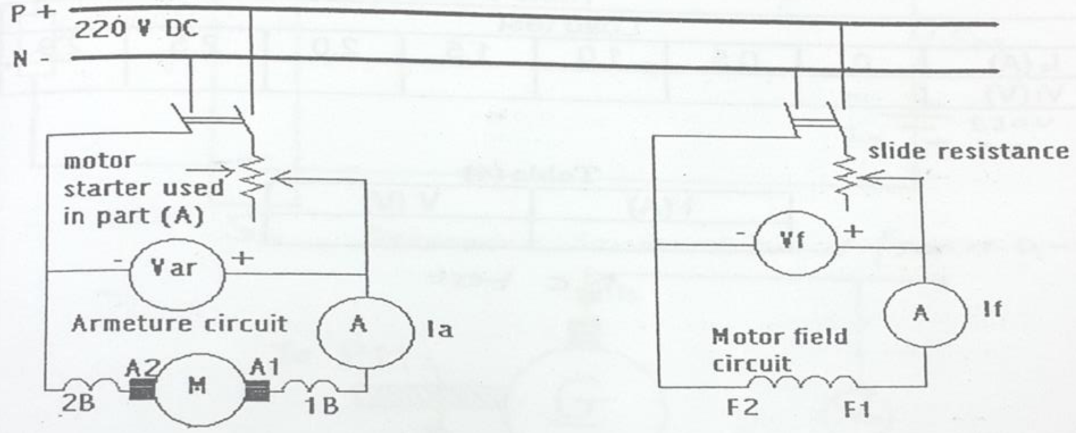

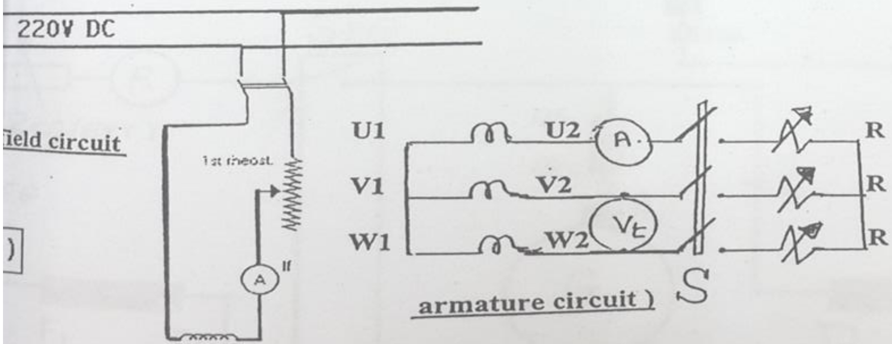

armature circuit)

Fig 1(1)

tor circuits (field circuit & armature circuit)

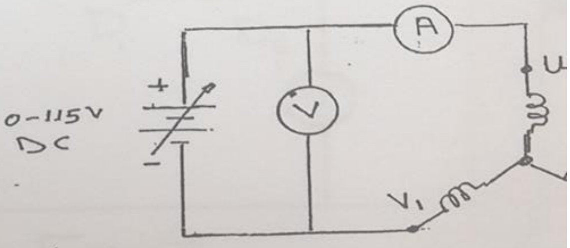

Fig (2) measurment of armature resistance

Tables and Measurements

Table 1

Open circuit test

I_f (A)	0	0.1	0.2	0.3	0.4	0.5	0.6	0.7	0.9	1.0	1.1
V_t (V)											

Table 2

Short circuit test

I_f (A)	0	0.1	0.2	0.3	0.4	0.5	0.6	0.8	0.9	1.0	1.1
I_{sc} (A)											

Table 3

Load test

I_a (A)	0	0.5	1.0	1.5	2.0	2.5	2.9
V_t (V)							

Table (4)

I (A)	V (V)

DC test

THE UNIVERSITY OF JORDAN
FACULTY OF ENGINEERING AND TECHNOLOGY
DEPARTMENT OF ELECTRICAL ENGINEERING
ELECTRICAL MACHINES LABORATORY EE 09033~~79~~478

EXPERIMENT NO.8

CHARACTERISTICS AND PERFORMANCE OF 3-PH INDUCTION MOTORS

OBJECTIVES

- Evaluation of the motor equivalent circuit parameters.
- Investigate the *load characteristics* (torque-speed and torque-current) of Induction motors.
- Evaluation of the motor performance parameters (efficiency, power factor, ... etc)

EQUIPMENT

- Three-Phase Squirrel-Cage Induction Motor: 380/660 V, 50 Hz, 5.5 kW, 11.7/6.8 A, 1450 RPM..
- Variable Voltage AC Source: 50 Hz, 0-400 V.
- Variable-Voltage DC Source 0-220 V.
- Eddy-Current Brake: 0-50 Nm.
- Variable Resistor R_B (for eddy-current brake control): 220 V (DC), 20 A, (11–220) Ω.
- 1 DC Ammeters: 0-10 A.
- 1 DC Voltmeters: 0-300 V
- 2 AC Ammeters: 0-20 A.
- 2 AC Voltmeters: 0-400 V
- Speedo-meter
- 3 Electromechanical Switches .

WIRING DIAGRAMS

Load Circuit

Connect the Eddy-Current Brake circuit as shown in the wiring diagram of Fig.1. Make sure that the resistance R_B is initially Maximum (F-CCW). Eddy-Current switch S_B should be initially at the OFF position.

Motor Circuit

Figure (2) shows the wiring diagram of the *motor* circuit. The armature is Δ-connected. The armature circuit switch S_A should be initially at the OFF position.

You should ask the Lab Instructor to chick the validity of the wiring diagrams before going ahead.

TEST PROCEDURE (A)

No-Load Test

- Connect the circuit as shown in Figs 1 & 2. Initially, the applied voltage should be zero, and the armature switch S_A should be at the OFF position.
- Increase the AC variable voltage to 100 V.
- Switch ON S_A and while doing so notice the readings of the Ammeters. Record, in Table (A) the voltmeters & Ammeters readings.
- Increase the armature terminal voltage gradually up to rated value of 380 V.
- While being unloaded, record the *line currents*, the line voltages, the *motor speed* and the input power in Table (B).
- Reduce the terminal voltage in steps as in Table (B), and in each step record the *line currents*, the line voltages, the *motor speed* and the input power

TEST PROCEDURE (B)

Blocked Rotor Test

- Increase the AC variable voltage to 50 V.
- Increase the armature terminal voltage gradually up to rated value of 380 V.
- Switch ON the Eddy-Current Brake source and vary R_B to up to the point at which the motor is Blocked (runs at almost zero-speed).
- Vary the terminal voltage up to the point at which the line current reaches its rated value of 11.7 A. Record, in Table (C).
- Reset R_B to its Maximum position (F-CCW) and switch it OFF.
- Increase the armature terminal voltage gradually up to rated value of 380 V.

TEST PROCEDURE (C)

Load Test

- While being unloaded record the currents, voltages power and speed in Table (d).
- Switch ON the Eddy-Current Brake source.
- Vary R_B in steps to match the torque readings of Table (D). In each step, record t currents, voltages power and speed in Table (d).
- Reset R_B to its Maximum position (F-CCW) and switch it OFF.
- Switch OFF the terminal voltage.

PROCEDURE (D)

DC Test

- Connect the wiring diagram of the circuit shown in Fig.3.
- Increase, gradually and carefully, the DC voltage in steps to match the reading Table (E). In each step, record the DC voltage.

RESULTS AND DISCUSSION

Procedures (A, B & C)

- Estimate the starting current if the motor is directly started at rated voltage.
- Sketch the no-load characteristics (V/I) of the motor.
- Calculate the stator resistance/phase.
- What is the value of slip at no load, rated voltage conditions.
- Sketch the no-load losses versus the terminal voltage. From the curve estimate t approximate value of the rotational losses.
- Calculate the parameters of the excitation branch.
- Calculate the input power factor at no-load and the percentage value of the no-lc current.
- From the blocked rotor test calculate the equivalent circuit parameters Req and X then estimate R1, R2', X1, and X2'.
- Calculate the input power factor at blocked rotor and the percentage value of blocked rotor voltage.
- From the load test, it is required to calculate the following:
  - Sketch the line current versus the output power.
  - Sketch the input power factor versus the output power
  - Sketch the motor speed versus the output power.
  - Sketch the motor efficiency versus the output power.

For each graph, comment on the results.

Table(A): Starting Conditions

V_{BR} (V)	I_L (A)
100	

Table (B): No-Load Test

V_L (V)	380	350	300	250	200	150	100	50
I_L (A)								
N_m (RPM)								
P1 + P2 (W)								

Table(C): Blocked-Rotor Test (Nm = 0.0)

I_L (A)	V_{BR} (V)	P1 + P2 (W)
11.7		

Table (D): Load Test (V_T = 380 V)

T_L (N.m)	0	3	6	9	12	15	18	21	24
$I_L = I_A$ (A))									
N_m (RPM)									
P1 + P2 (W)									

Table (E): DC TEST

V_{DC} (V)			
I_{DC} (A)	1.0	2.0	3.0

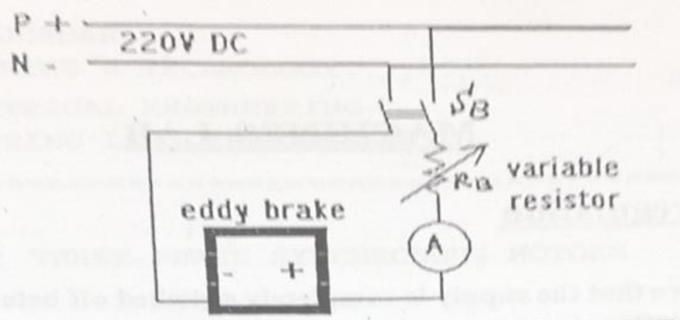

Eddy current brake (circuit and connection)

Fig (1)

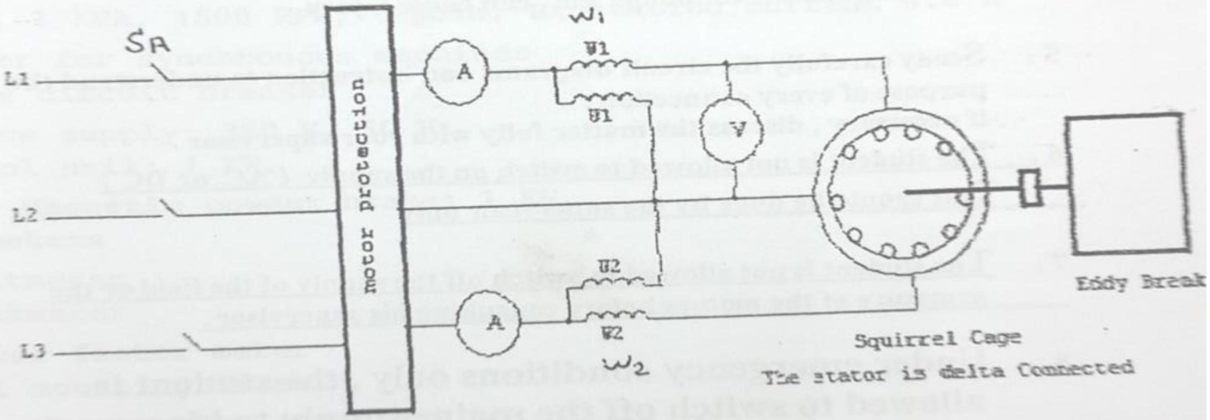

Fig (2)

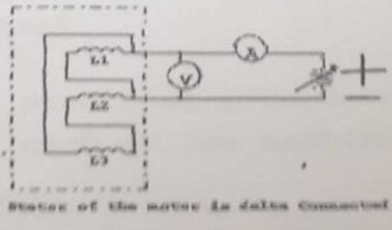

The Stator of the motor is delta Connected

Fig .3

THE UNIVERSITY OF JORDAN
FACULTY OF ENGINEERING & TECHNOLOGY.
DEPARTMENT OF ELECTRICAL ENGINEERING
ELECTRICAL ENGINEERING LAB. EE93~~329~~478

EXPERIMENT NO.(9): THREE-PHASE SYNCHRONOUS MOTORS

OBJECTIVES: This experiment is designed to study the:
(1) Starting procedure.
(2) Load characteristics.
(3) V-curves.

EQUIPMENT

- 3-phase synchronous machine (salient pole):
  380 V, 1 KVA, 1500 RPM, 4-pole, Excitation current 0.6 A
- Exciter for synchronous machines
- 3-pole circuit breaker
- 3-phase supply: 380 V, 50 Hz.
- Control unit: 1 KW.
- Load: Magnetic powder brake: 1 KW.
- 2 Ammeters
- 1 Voltmeter
- 1 Wattmeter
- 1 Power factor meter
- Panel mounting frame
- Connection cables and plugs
- Rubber coupling sleeves and coupling guards
- Prime Mover set (DC shunt motor).

SETTING OF THE CONTROL UNIT

Set the control unit as follows:
Speed N = 1500 RPM, Torque M = 10 N.m
Operating Mode: m = constant

NOTE (1): In any of the practical procedure, Thermal and Ea protection of each of the machines involved should assured.

NOTE (2): A synchronous motor is not a self-starting motor. the rotor field is poles are excited by the field current and stator terminals are connected to the AC supply, the motor will not start; instead, it vibrates. Three methods are normally used to start a synchronous motor. These are:

(1) by another machine as a prime mover.
(2) by using a variable-frequency supply.
(3) start the machine as an induction motor.

In the last method, an additional winding, which resembles the cage of an induction motor, is mounted on the rotor. This cage-type winding is known as the Damper or Amortisseur Winding. The machine used here contains a damper winding, which without exciter, operates in the same way as a short-circuit cage rotor and permits asynchronous starting of the machine. The exciter voltage is interrupted during start-up by a normally closed contact and is connected only when the motor has reached its highest asynchronous speed. To provide the easiest possible transition from asynchronous to synchronous running, the motor should be started without a load being applied.

PRIME MOVER CONNECTION AND CONTROL:

A prime mover is required to conduct test procedure (2). The prime mover to be used in this experiment is a DC shunt motor. The wiring diagram is shown in Fig.(1). The sequence of steps that should be followed to start and control the speed of this motor is as follows:

(1) While the voltage knob is fully counterclockwise (i.e., zero output voltage) switch S1 ON (position I).
(2) Press the START switch (Green indicator ON).
(3) Set the resistance of the field regulator R_{fm} to almost 200 Ω
(4) To start the drive motor, increase V_s gradually up to 120 V.
(5) Use the field regulator of the motor field to set the motor speed to the required value (1500 RPM).

PRACTICAL PROCEDURE NO.(1): MEASUREMENT OF ARMATURE RESISTANCE

(1) Connect the circuit of Fig.(2).
(2) Switch S ON. Carefully and gradually increase the applied voltage in steps to match the requirements of Table (1). In each step record the corresponding V_{DC}.
(4) Reduce V_{DC} gradually to minimum. Switch S OFF.

PRACTICAL PROCEDURE NO.(2): NO-LOAD AND SHORT-CIRCUIT TESTS

(1) Connect the circuit of Fig.(3).

(2) Switch S_1 ON and set the exciter current to zero Ampere.

(3) Start the Prime Mover as previously mentioned. Set its speed at 1500 RPM and keep this speed fixed throughout the test.

(4) Measure the voltage at the terminals of the Synchronous Mach.

(5) Increase the exciter current in steps to match the requirements of Table (2). For each step, record the terminal voltage.

(6) Reduce the Exciter current to zero once more.

(7) Short circuit the terminals of the synchronous machine by closing S_2 ON.

(8) Measure the stator current and record it in Table (3).

(9) Increase the Exciter current in steps to match the requirements of Table (3). For each step, record stator current (short-circuit current).

(10) Reduce the exciter current to zero. Switch S_2OFF.

PRACTICAL PROCEDURE NO.(3): LOAD CHARACTERISTICS

(1) Connect the stator circuit as shown in Fig.(4).

(2) Switch ON the Control Unit. Adjust its Set-Start value such that the motor can be started without a load being applied (i.e., Position 10).

(3) Set the measuring instruments as follows:

* 1000 V AC for the Voltmeter at the stator terminals.
* 10 A AC for the Ammeter in the stator circuit.
* 1 A DC for the Ammeter in the field circuit.
* (0.1-30) A RMS, (0.3-1000) V RMS, Real Power Mode for the Wattmeter.

Remember to choose the appropriate scale for each instrument without overloading it. This overloading is indicated, when occurs, by a RED light.

(4) Adjust the exciter current to 0.6 A.

(5) Press the Push-Button switch on the motor terminal board, and while doing so, switch on the circuit breaker S. Keep the Push-Button switch pressed until the motor has reached its highest asynchronous speed. Then release this switch so that the motor continuous to run in a synchronous manner.

(6) Set the torque on the Control Unit in steps as in Table (4). In each step record Line Voltage, Speed, Stator Current,

Input Real Power (single-phase), Input Reactive Power (single-phase) and Input Power Factor.

Note that the measured power should be multiplied by 3 to evaluate the total input power.

(7) Reduce the load torque gradually to minimum.
(8) Switch OFF S.

PRACTICAL PROCEDURE NO.(4): V-CHARACTERISTICS

(1) Repeat steps (1)-(3) of Procedure No.(3).
(2) Set the excitation current to 0.6 A.
(3) Set the torque by the Control Unit to Zero N.m (no load)
(4) Record the Stator current and the Input Active and Reactive Power, Input Power Factor Factor in Table (5).
(5) Reduce the excitation current in steps to match the requirements of Table (5).

Note that when the machine is under excited, if the excitation current falls below a certain value, the operation becomes unstable. This will limit the minimum value of the excitation current. If this happens while conducting the test switch S OFF immediately.

(6) Repeat steps (3)-(5) but for T = 2 N.m

RESULTS AND COMMENTS

(1) Calculate the average value of the Armature Resistance R_a. What can you suggest to correct for AC operation.
(2) Plot, on one graph paper, the Open-Circuit and Short-Circuit characteristics of the tested machine. Show scales.
(3) Calculate the Synchronous Reactance of the armature. Plot the Synchronous Reactance versus the Field Current and comment on the variation.
(4) If the speed of the machine is not fixed during the short-circuit test, do you expect the short-circuit current to vary?. Justify your answer.
(5) From the Load Test, calculate the Developed Torque, Developed Horsepower, Output Horespower, Torque Angle. Record results in Table (4).
(6) Plot, for the Load Test, the Output Horsepower, Developed Horsepower, Developed Torque, Stator Current, Input Power Factor, Input Reactive and Active Powers and Torque Angle

versus the Load Torque. Comment on the Curves.

(7) Plot, in one graph paper, the V-CURVES from the results of test procedure (5).

Plot, in one graph paper, the Input Power Factor versus the Field Current.

(8) What can you deduce from the plots of (7) above?. Give full explanation of the shapes and meanings of these plots.

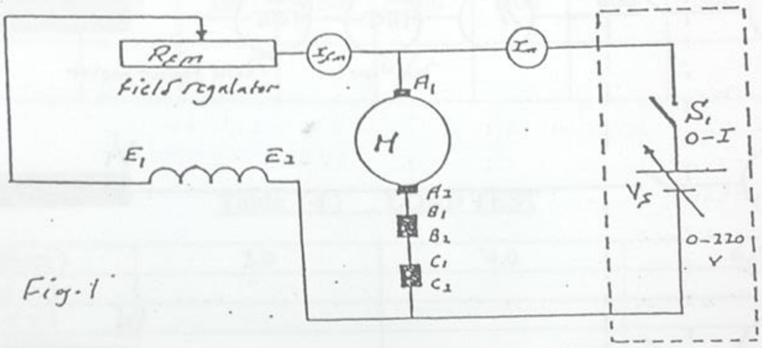

Fig.1

Practical 1

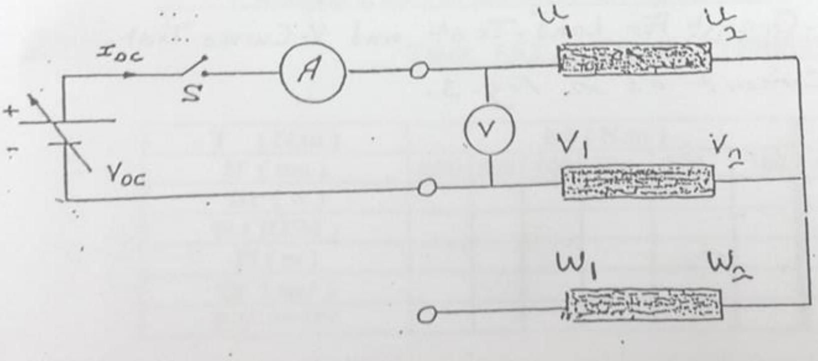

Fig.2

DC Test.

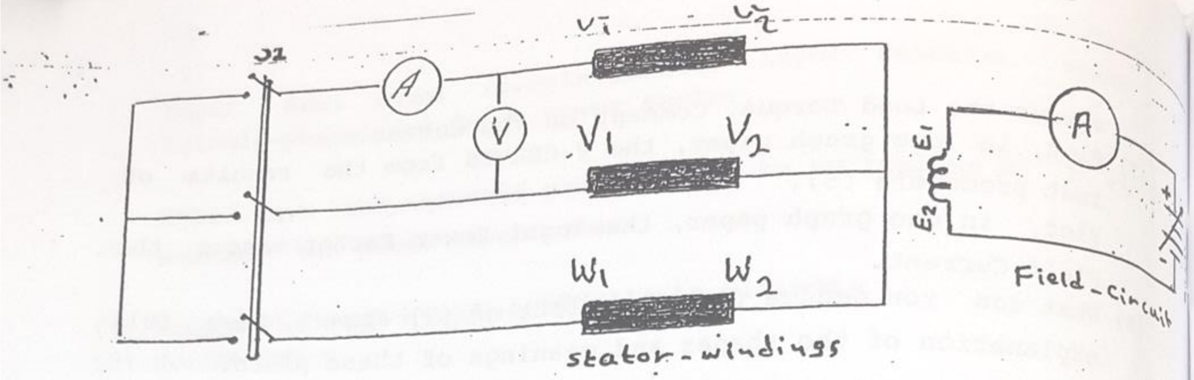

Fig.3: No-load / Short-Circuit Tests

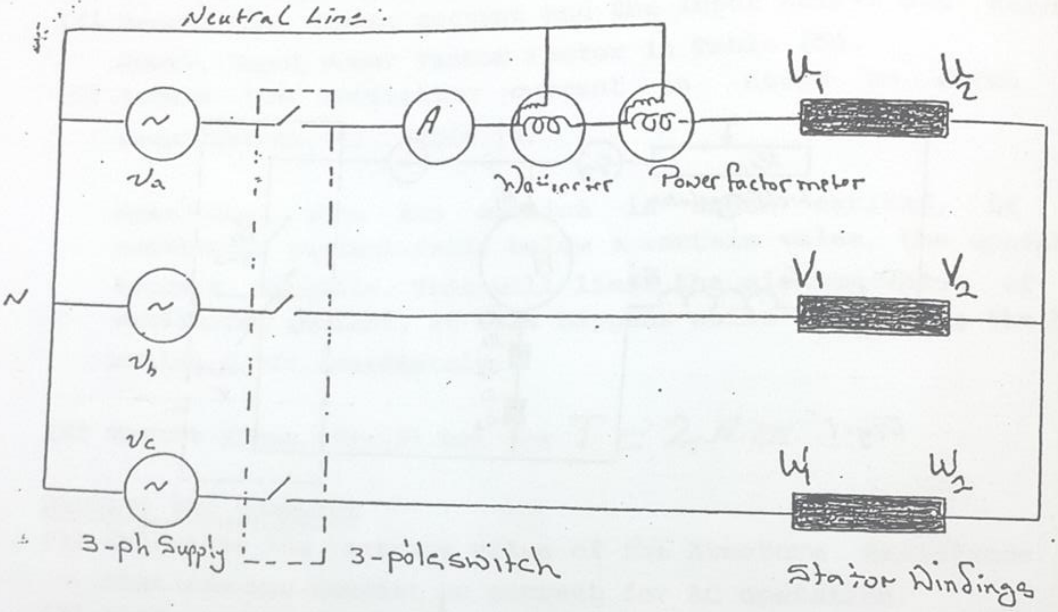

Fig. 4 : Stator-Circuit for Load-Test and V-Curves Test.
Rotor Circuit as in Fig. 3.

Table (1) DC Armature Resistance

Idc (A)	0.5	1.0
Vdc (V)		
Rdc (ohm)		

Table (2) NO LOAD TEST

If (ma)	0.0	50.0	100	150	200	300	400	500	600
Ea (V)									

Table (3) SHORT CIRCUIT TEST

If (ma)	0.0	50	100	150	200	300	400	500	600
Isc (A)									

Table (4) LOAD TEST

T (N.m)	2.0	4.0	6.0
Ia (A)			
Vt (v)			
N (RPM)			
Pi (w)			
Qi (var)			
P.F *****			

***** : Indicate if the P.F inductive or capacitive .

Table (5) V CHARACTERISTICS

T (N.m)	0.0 (N.m)						2 .0 (N.m)					
If (ma)	600	500	400	300	200	100	600	500	400	300	200	100
Ist (A)												
N (RPM)												
Pi (w)												
Qi (var)												
P.F *****												

***** : Indicate if the P.F inductive or capacitive .